SINGLE STATION PHOTOELETRIC SMOKE ALARM **SK40** USER'S MANUAL

TABLE OF CONTENTS

INTRODUCTION……1
LOCATIONS TO INSTALL YOUR SMOKE ALARMS……1
LOCATIONS TO INSTALL YOUR SMOKE ALARMS IN MOBILE HOMES AND RVs……4
LOCATIONS NOT TO INSTALL YOUR SMOKE ALARMS……4
INSTALLING YOUR SMOKE ALARMS……5
RED LED INDICATOR……6
SILENCE FUNCTION……6
TESTING YOUR SMOKE ALARMS……6
TAKING CARE OF YOUR SMOKE ALARMS……7
FIVE YEAR LIMITED WARRANTY……7

INTRODUCTION

SENTEK ' s single station photoelectric smoke alarm is designed to sense smoke that comes into the alarm chamber. It does not sense gas, heat or flame.This smoke alarm is designed to give early warning of developing fires by giving off the alarm sounds from its built-in buzzer.It can provide precious time for you and your family to escape before a fire spreads. However, the smoke alarm makes such pre-warning of fire accident possible, only if the alarm is located, installed, and maintained properly as described in this User's Manual.

WARNING: This smoke alarm is designed for use in a single residential unit only, which means that it should be used inside a single family home or apartment. It is not meant to be used in lobbies, hallways, basements, or another apartment in multi-family buildings, unless there are already working alarms in each family unit. Smoke alarms, placed in common areas outside of the individual living unit, such as porches or in hallways, may not provide early warning to residents. In multi-family buildings, each family living unit should set up its own alarms.

WARNING: This alarm is not meant to be used in non-residential buildings. Warehouses, industrial or commercial buildings, and special purpose non-residential buildings require special fire detection and alarm systems. This alarm alone is not a suitable substitute for complete fire detection systems for places where many people live or work, such as hotels or motels. The same is true of dormitories, hospitals, nursing homes or group homes of any kind, even if they were once single family homes. Please refer NFPA 101, requirements for fire protection in buildings not defined as "households".

LOCATIONS TO INSTALL YOU SMOKE ALARMS

Smoke alarms should be installed in accordance with the NFPA Standard 74 (National Fire Protection Association, Batterymarch Park, Quincy, MA 02169). For complete coverage in residential units, smoke alarms should be installed in all rooms, halls, storage areas, basements, and attics in each family living unit. Minimum coverage is one alarm on each floor and one in each sleeping area and attics in each family living unit. Minimum coverage is one alarm on each floor and one in each sleeping area.

Here, we have useful tips for you:

- Install a smoke alarm in the hallway outside every separate bedroom area, as shown in Figure 1. Two alarms are required in homes with two bedroom areas, as shown in Figure 2.
- Install a smoke alarm on every floor of a multi-floor home or apartment, as shown in Figure 3.
- Install a minimum of two alarms in any household.
- Install a smoke alarm inside every bedroom.
- Install smoke alarms at both ends of a bedroom hallway if the hallway is more than 40 feet (12 meters) long.
- Install a smoke alarm inside every room where one sleeps with the door partly or completely closed, since smoke could be blocked by the closed door and a hallway alarm may not wakeup the sleeper if the door is closed
- Install basement alarms at the bottom of the basement stairwell.
- Install second-floor alarms at the top of the first-to-second floor stairwell.

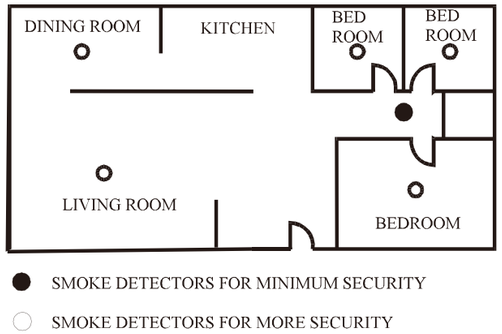

Figure 1: LOCATIONS FOR PLACING SMOKE ALARMS FOR SINGLE RESIDENCE WITH ONLY ONE SLEEPING AREA

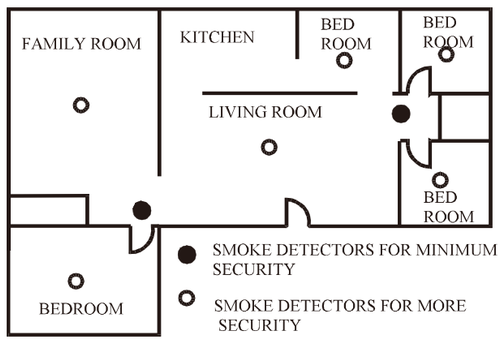

Figure 2: LOCATIONS FOR PLACING SMOKE ALARMS FOR SINGLE-FLOOR RESIDENCE WITH MORE THAN ONE SLEEPING AREA

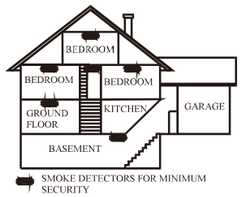

Figure 3: LOCATION FOR PLACING SMOKE ALARMS FOR A MULTI-FLOOR RESIDENCE

Be sure no door or other obstruction blocks the path of smoke to the alarm.

- Install additional alarms in your living room, dining room, family room, attic,utility and storage rooms.
- Install smoke alarms as close to the center of the ceiling as possible. If this is not practical, put the alarm on the ceiling, no closer than 4 inches (10 cm) from any wall or corner, as shown in Figure 4.
- If ceiling mounting is not possible and wall mounting is permitted by your local and state codes, put wall-mounted alarms between 4 and 6 inches (10~15 cm) from the ceiling, also see Figure 4.
- If some of your rooms have sloped, peaked, or gabled ceilings, try to mount alarms 3 feet (0.9 meter) measured horizontally from the highest point of the ceiling as shown in Figure 5.

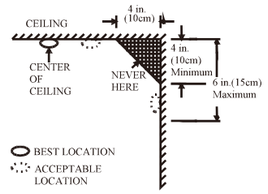

Figure 4: RECOMMENDED BEST AND ACCEPTABLE LOCATIONS TO MOUNT SMOKE ALARMS

Figure 5: RECOMMENDED LOCATION TO MOUNT SMOKE ALARMS IN ROOMS WITH SLOPED, GABLED, OR PEAKEDCEILING

△ ***CAUTION*** (As required by State Fire Marshall)

"Early warning fire detection is best achieved by the installation of fire detection equipment in all rooms and areas of the household as follows: (1) A smoke alarm installed in each separate sleeping area (in the vicinity, but outside of the bedrooms), and (2) Heat or smoke alarms in the living rooms, dining rooms, bedrooms, kitchens, hallways, attics, furnace rooms, closets, utility and, storage rooms, basements and attached garages."

For your information, NFPA Standard 74, Section 2-4 reads as follows "2-4.1.1 Smoke alarms shall be installed outside of each separate sleeping area in the immediate vicinity of the bedrooms and on each additional story of the family living unit including basements and excluding crawl spaces and unfinished attics.

The provisions of 2-4. 1.1 represent the minimum number of alarms required by this standard.. It is recommended that the householder consider the use of additional smoke alarms for increased protection for those areas separated by a door from the areas protected by the required smoke alarms under 2-4.1.1 above. The recommended additional areas are living room, dining room, bedroom(s), kitchen, attic (finished or unfinished,) furnace rooms, utility room, basement, integral or attached garage, and hallways not included in 2-4.1.1 above. However, the use of additional alarms remains the option of the householder. " We recommend complete coverage and use of additional smoke alarms.

LOCATIONS TO INSTALL YOUR SMOKE ALARMS IN MOBILE HOMES AND RVs

Mobile homes and RVs built after about 1978 were designed and insulated to be energy-efficient. In mobile homes and RVs built after 1978, smoke alarms should be installed as described above. Older mobile homes and RVs may have little or no insulation compared to current standards. Outside walls and roofs are often made of non-insulated metal, which can transfer thermal energy flow from outdoors. This makes the air right next to them hotter or colder than the rest of the inside air. These layers of hotter or colder air can keep smoke from reaching a smoke alarm. Thereby, install smoke alarms in such units only on inside walls. Place them between 4 and 6 inches (10 - 15 cm) from the ceiling. If you are not sure how much insulation is in your mobile home or RV, then install the alarm on an inside wall. If the walls or ceiling are unusually hot or cold, then install the alarm on an inside wall. Install one alarm as close to the sleeping area as possible for minimum security, or install one alarm in each room for security. Before you install any alarm, please read the following section on "LOCATIONS NOT TO INSTALL YOUR SMOKE ALARMS".

LOCATIONS NOT TO INSTALL YOUR SMOKE ALARMS

Nuisance alarms take place when smoke alarms are installed where they will not work properly. To avoid nuisance alarms, do not install smoke alarms in the following situations:

- Combustion particles are the by-products of something that is burning Thus,in or near areas where combustion particles are present you do not install the smoke alarms to avoid nuisance alarms, such as kitchens with few windows or poor ventilation, garages where there may be vehicle exhaust, near furnaces, hot water heaters, and space heaters.
- Do not install smoke alarms less than 20 feet (6 meters) away from places where combustion particles are normally present, like kitchens. If a 20-foot distance is not possible, e.g. in a mobile home, try to install the alarm as far away from the combustion particles as possible, preferably on the wall. To prevent nuisance alarm alarms, provide good ventilation in such places.

IMPORTANT : For any reason, do not disable the alarm to avoid nuisance alarms.

- When air streams passing by kitchens, the way how an alarm can sense combustion particles in normal air-flow paths is graphically shown in Figure 6, which indicates the correct and incorrect smoke alarm locations concerning this problem.

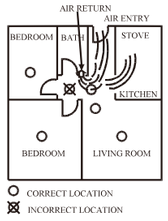

Figure 6: RECOMMENDED SMOKE ALARM LOCATIONS TO AVOID AIR STREAMS WITH

- In damp or very humid areas, or near bathrooms with showers. Moisture in humid air can enter the sensing chamber, then turns into droplets upon cooling, which can cause nuisance alarms. Install smoke alarms

at least 10 feet (3 meters) away from bathrooms.

- In very cold or very hot areas, including unheated buildings or outdoor rooms. If the temperature goes above or below the operating range of smoke alarm, it will not work properly. The temperature range for your smoke alarm is 32 °F to 120 °F (0 °C to 50 °C).
- In very dusty or dirty areas, dirt and dust can build up on the alarm's sensing chamber, to make it overly sensitive. Additionally, dust or dirt can block openings to the sensing chamber and keep the alarm from sensing smoke.
- Near fresh air vents or very drafty areas like air conditioners, heaters or fans, fresh air vents and drafts can drive smoke away from smoke alarms.
- Dead air spaces are often at the top of a peaked roof, or in the corners between ceilings and walls. Dead air may prevent smoke from reaching an alarm. See Figures 4 and 5 for recommended mounting locations.
- In insect-infested areas. If insects enter an alarm's sensing chamber, they may cause a nuisance alarm. Where bugs are a problem, get rid of them before putting up an alarm.
- Near fluorescent lights, electrical "noise" from fluorescent lights may cause nuisance alarms. Install smoke alarms at least 5 feet (1.5meters) from such lights.

WARNING: Never remove batteries to stop a nuisance alarm. Pressing the test button and after releasing it, the alarm will be hushed about 9 minutes. Then Open a window or fan the air around the alarm to get rid of the smoke. The alarm will turn itself off when the smoke is gone. If nuisance alarms persist, attempt to clean the alarm as described in this User's Manual.

WARNING: Do not stand close to the alarm when the alarm is sounding. The alarm is loud in order to wake you in an emergency. Too much exposure to the horn at close range may be harmful to your hearing.

INSTALLING YOUR SMOKE ALARMS

Model SK40 smoke alarms are to be mounted on the ceiling or on the wall if necessary. Since SK40 smoke alarm is a single-station type, it cannot be linked to other alarms.

Read "LOCATIONS TO INSTALL YOUR SMOKE ALARMS" and "LOCATIONS NOT TO INSTALL YOUR SMOKE ALARMS" section in this Manual first, then decide where to install an alarm.

Please follow these steps to install your smoke alarm:

1. At the place where you are going to install the alarm, draw a horizontal line six inches long.
2. Remove the mounting bracket from your unit by rotating it counterclockwise.
3. Place the bracket so that the two longest hole slots are aligned on the line. In each of keyhole slots, draw a mark to locate a mounting plug and screw.
4. Remove the bracket.
5. Using a 3/16-inch (5mm) drill bit, drills two holes at the marks and insert plastic wall plugs. Put the alarm away from getting plaster dust on it when you drill holes for mounting.
6. Using the two screws and plastic wall plugs (all supplied), attach the bracket to the wall. Plug the power connector into other connector attached at the back of the alarm . It is keyed so it can only be installedone way. Tug the connector to be sure that it is plugged in correctly. The connector can be removed at any time by holding the connector body firmly and pulling it out.
7. Line up the slot of the bracket and the alarm. Push the alarm onto the mounting bracket and turn it clockwise to fix it into place. Pull outward on the alarm to make sure it is securely attached to the mounting bracket.

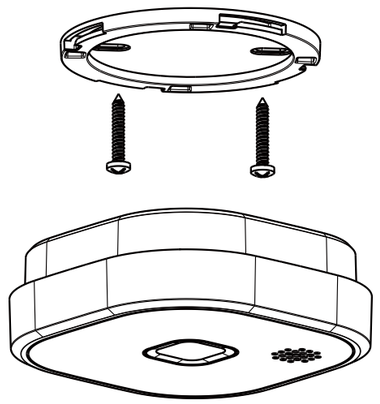

RED LED INDICATOR

The red LED, as the ALARM indicator, is featured with the alarm. It can be seen through the test button on the cover of the alarm. When red LED flashes once 32 seconds, it indicates the alarm under normal operation. When smoke alarm senses smoke and simultaneously sounds an audible alarm, the red LED will flash very frequently, once 0.5 seconds.

SILENCE FUNCTION

To stop the nuisance alarm, silence function is available to use. Pressing the test button and after releasing it, the alarm will be hused about 9 minutes and the LED indicator flashes once each 8 seconds (in normal working status, the LED flashes once each 32 seconds). During this time, the alarm becomes insensiive to the smoke. Wait for the alarm to exit the silence status and the alarm will continue to detect the smoke again.

NOTE: Do not test the alarm with smoke in silence mode, otherwise the alarm will not alarm.

TESTING YOUR SMOKE ALARMS

Test the alarm weekly by pressing the test button with your figure until the buzzer sounds. This is the only way to be sure that alarm is working correctly. If the alarm fails to test properly, have it repaired or replaced immediately.

WARNING: never use an open flame to test the alarm. You may set fire to damage the alarm, as well as your home. The built-in test switch accurately tests all the alarm functions.

WARNING: When you are not testing the unit and the alarm buzzer sounds a loud continuous sound, this means the alarm has sensed smoke or combustion particles in the air. Be sure that the alarm buzzer is a warning of a possible serious situation, which requires your immediate attention.

The alarm could be caused by a nuisance situation. Cooking smoke or a dusty furnace, sometimes called “friendly fires”can cause the alarm to sound. If this happens, open a window or fan the air to remove the smoke or dust. The alarm will turn off as soon as the air is completely clear.

NOTE: Do not disconnect the battery from the alarm.This will remove your protection from fires.

If the alarm buzzer begins to beep once 32 seconds at the same time the LED flashing, this signal means that the alarm’s battery is weak. Replace new battery immediately. Keep fresh batteries on hand for this purpose.

TAKING CARE OF YOUR SMOKE ALARMS

To keep your alarm in good working order, you must test the alarm weekly, as referring to section “TESTING YOUR SMOKE ALARM” 9Volt GP1604S Carbon-Znic battery with SK40 for one year lifetime operation. Replace the alarm battery once a year or immediately when the low battery “beep” signal sounds once 32 seconds at same time the LED flash.

NOTE: For replacement battery, use Gold Peak 1604P 1604S,1604A; Eveready 522,216,1222; Duracell MN1604; Golden Power G6F22, GL6F22A; Pairdeer 6F22,6LR61,CR-V9; Huiderui CP9V; EVE CR9V/P.

WARNING: Do not use any other kind of battery. This alarm may not operate properly with other kind of battery.

Normal, the LED flashes every 32 seconds. A beep or chirp occurring at half time of LED flashes, it indicates the alarm is fault.

Open the cover and vacuum the dust off the alarm’s sensing chamber at least once a year. This can be done when you open the alarm to change the battery. Remove battery before cleaning. To clean alarm, use soft brush attachment to your vacuum. Carefully remove any dust on alarm components, especially on the openings of the sensing chamber. Replace battery after cleaning. Test alarm to make sure battery is correctly. Check to make sure there are no obstruction inside the sensing chamber. If there is any dust in the sensing chamber insert a toothpick from the back to the front.

NOTE: If nuisance alarms keeping coming from alarm, you should check whether the alarm’s location is adequate. Refer to section “WHERE TO INSTALL SMOKE ALARM” Move your alarm if it is not located properly. Clean the alarm as describe above.

Clean alarm cover when it gets dirty. First open the cover and remove battery. Hand-wash cover with cloth dampened with clean water. Dry it with lint-free cloth. Do not get any water on the alarm components. Replace the battery, and close cover. Test alarm to make sure that battery works correctly.

FIVE YEAR LIMITED WARRANTY

NOTE: In order to protect your right, please keep the original purchase receipt for the proof of buying SENTEK alarm from our authorized dealers. NO warranty can be offered without the original purchase receipt.

SK40 is designed complying with EN14604. SENTEK warrants its enclosed Smoke Alarm, but not the battery, to be free from defects in materials and workmanship under normal use and service for a period of five Years from date of purchase. SENTEK makes no other express warranty for this smoke alarm. No agent, representative, dealer, or employee of the company has the authority to increase or alter the obligations or limitations of this warranty. The company’s obligation of this warranty shall be limited to the repair or replacement of any part of the alarm which is found to be defective in materials or workmanship under normal use and service during the five year period commencing with the data of purchase.

During the initial one-year period commencing with the data of purchase, such repair or replacement shall be made without charge. During the latter four years of the warranty period, such repair or replacement shall be made at a charge to the customer not to exceed the manufacturer’s cost. Units in need of repair should be returned, shipping prepaid, to customer. Service Department, Ningbo Sentek Electronic Co., Ltd.-448 Yingchun Road, Wangchun Industrial Zone, Ningbo City 315175, Zhejiang ,China.

The company shall not be obligated to repair or replace units, which are found to be in need of repair because of damage, unreasonable use, modifications, or alterations occurring after the data of purchase. The duration of any implied warranty, including that of merchantability or fitness for any particular purpose, shall be limited to the period of five years commencing with the data of purchase. In no case shall the Company be liable for any consequential or incidental damages for breach of this or any other warranty expressed or implied whatsoever, even if the loss or damage is caused by the company’s negligence or fault. Some states do not allow the exclusion or limitation of incidental or consequential damages, so the above limitation or exclusion may not apply to you. SENTEK makes no warranty, expressed or implied, written or oral, including that of merchantability or fitness for any particular purpose, with respect to the batteries. This warranty gives you specific legal rights, and you may also have other rights which vary from state to state.

Sensor Specification:

Smoke Sensitivity	0.08~0.13dB/m
Alarm sound level	85dB/3meters
Battery Life	One year\9Volt GP1604S battery
Quiescent current	<8uA
Alarm current	<20mA
Temperature Range	-10℃~ 55℃
Humidity	0 to 95%RH, no condensation or icing
Weight	116.5g (with battery)
Dimension	97x97x32mm

DWG No. K04402105 Rev.1.1

Manufacturer: **Sentek Electronics Co., Ltd.**
#448 Yingchun road, Wangchun Industrial Park, Ningbo City
315175, Zhejiang, China
Tel: 86-574-8715 3117 Fax: 86-574-8715 5951
E-mail: sales@sentek.cc Http: //www.sentek.cc

1.1	灵敏度更改为0.08~0.13dB/m	徐珊珊	2020/11/23	sentek® 宁波尚泰电子有限公司 NINGBO SENTEK ELECTRONICS CO.,LTD.
1.0	新发行(New issue)	徐珊珊	2019/02/14	
更新版次 (REV.)	修订记录 (REVISION HISTORY)	签名 (SIGNATURE)	日期 (DATE)	

设计 DESIGN	徐珊珊	日期 DATE	2020/11/23	材料 MATERIAL	PAPER		产品型号 PRDDUCT ITEM	SK40
审核 CHEDKED	刘　胜	日期 DATE	2020/11/23				零件名称 PART NAME	说明书 (Installation Instructions)
核准 APPROVED	宋文轩	日期 DATE	2020/11/23					
品质 QUALITY	李志强	日期 DATE	2020/11/23	单位 UNT	版本 REV.	比例 SCALE	图纸编号 PART NO.	K04402105
业务 SALES	刘琼洁	日期 DATE	2020/11/23					
工艺 PROCESS	田　强	日期 DATE	2020/11/23	MM	1.0	1:1	品　号 P/N	4401297

备注：A3,80g黑白双面印刷(对折12等份)